SALES DRAWING SALES DRAWING SALES DRAWING

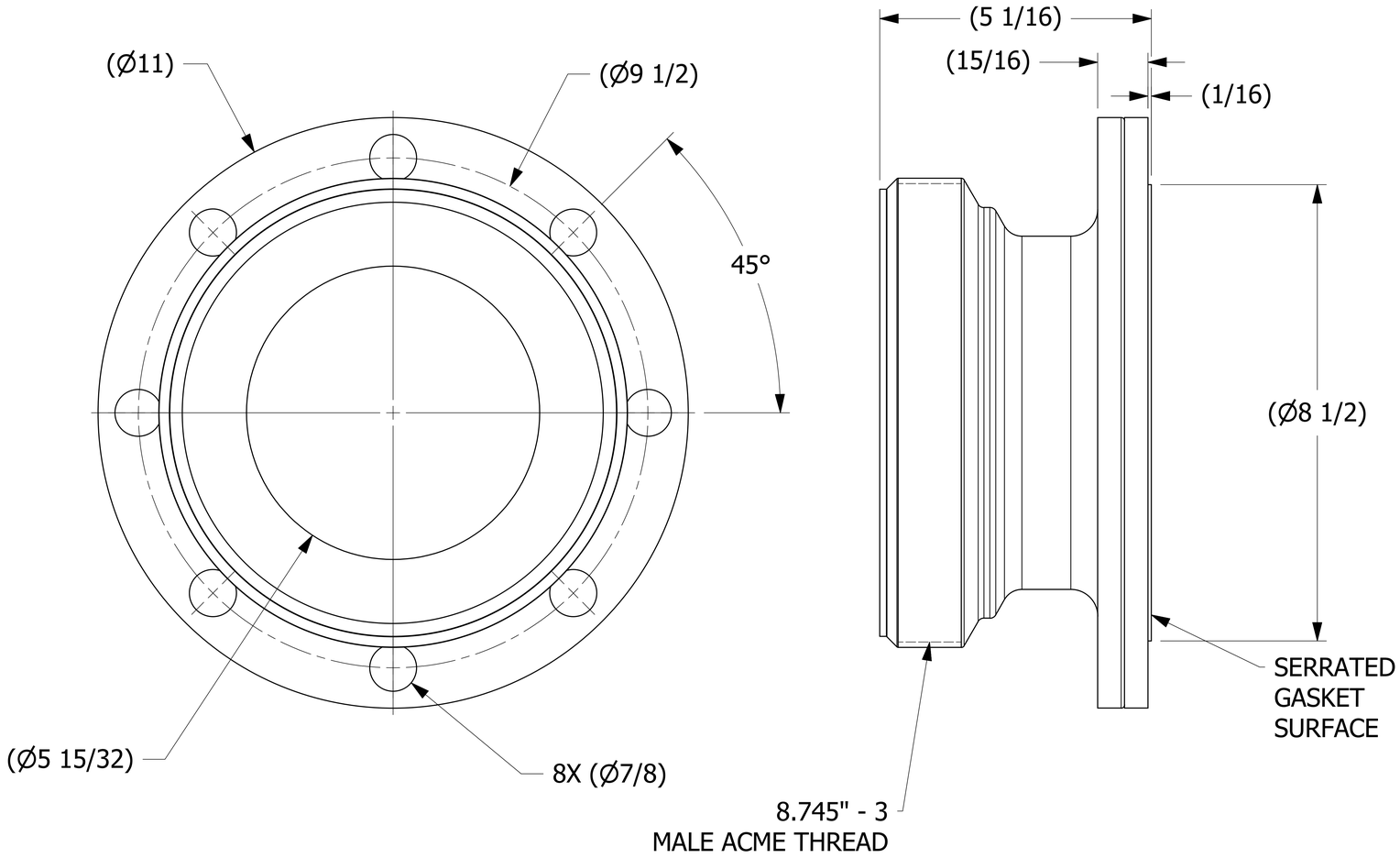

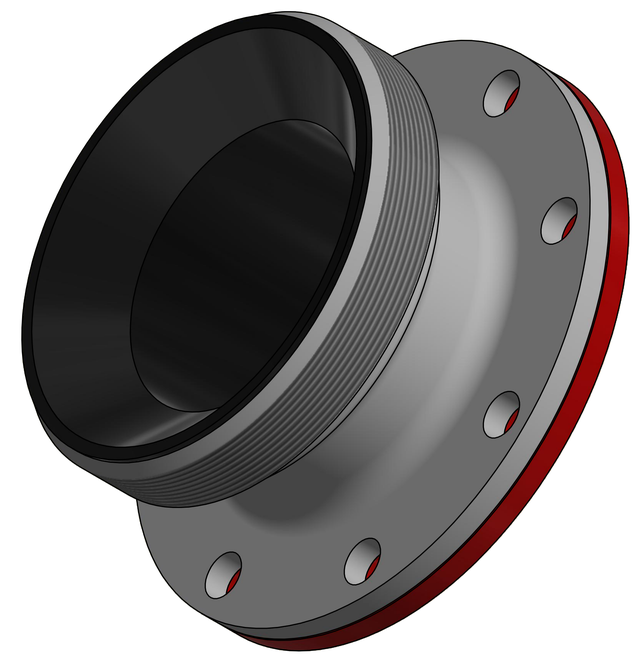

NOTES:
1. APPROXIMATE WEIGHT IS 27 LBS.
2. HAMMER UNION IS UNPAINTED.

REV	BY	DATE	REF #	PUB
A	WEB	4/21/20	202004211657	WEB

UNLESS OTHERWISE SPECIFIED DIMENSIONAL TOLERANCES
FRACTIONAL: ±1/16
X.XX: ±.03
X.XXX: ±.015
ANGULAR: ±1°
DEBURR ALL SHARP EDGES. ALL MACHINED SURFACES TO HAVE A 125 RMS FINISH UNLESS NOTED OTHERWISE.
THIRD ANGLE PROJECTION

DRAWN BY:	WEB
CHECKED BY:	EJF
PROTOTYPE DATE:	5/16/2018
APPROVED FOR PRODUCTION BY:	EJF
PRODUCTION DATE:	4/21/2020
SIZE:	E
DRAWING #:	47167

SALCO PRODUCTS, INC.

PART NAME: HAMMER UNION 6" FLANGED

MATERIAL: SEE BOM

PROJECT #: H180418 | SHEET #: 1 OF 1 | SCALE: 1 : 1

PART #: HSHU6FXF206

THIS PRINT, PROPERTY OF SALCO PRODUCTS INC, CONTAINS PROPRIETARY INFORMATION AND MUST NOT BE COPIED, REPRODUCED, OR USED DETRIMENTALLY TO OUR INTEREST.

SALES DRAWING SALES DRAWING SALES DRAWING